DATALOGIC

DATALOGIC AUTOMATION

FILOS

USER'S MANUAL

821002460
FEBRUARY 2013

© 2008 – 2013 Datalogic Automation S.r.l. - ALL RIGHTS RESERVED - Protected to the fullest extent under U.S. and international laws. • Copying, or altering of this document is prohibited without express written consent from Datalogic Automation S.r.l.
Datalogic and the Datalogic logo are registered trademarks of Datalogic S.p.A. in many countries, including the U.S.A. and the E.U.

All other brand and product names mentioned herein are for identification purposes only and may be trademarks or registered trademarks of their respective owners.

Published 04 February 2013
Printed in Donnas (AO), Italy.

SYMBOLS

Symbols used in this manual along with their meaning are shown below. Symbols and signs are repeated within the chapters and/or sections and have the following meaning:

Generic warning:

This symbol indicates the need to read the manual carefully or the necessity of an important maneuver or maintenance operation.

Electricity Warning:

This symbol indicates dangerous voltage associated with the laser product, or powerful enough to constitute an electrical risk. This symbol may also appear on the machine at the risk area.

Laser Warning:

This symbol indicates the danger of exposure to visible or invisible laser radiation. This symbol may also appear on the machine at the risk area.

Fire warning:

This symbol indicates the danger of a fire when processing flammable materials. Because there is a danger of fire, it is indispensable to follow the instructions provided by the manufacturer when commissioning the machine.

Note:

Carefully read the user's manual before using the laser system.

REVISION INDEX

Revision	Date	Number of added or edited pages
0.0	04/02/2013	Release

FOREWORD

Information included in this manual are indicated to a *qualified installer* able to integrate the equipment into a system, accomplishing with all the protection features required from internationals rules and local legislations. Please refer to Appendix for further information.

Following manual is referred to a Filos laser source in Class 4 configuration.

In addition to being professionally trained in their role, personnel assigned to work on the machine must be informed and made acquainted with the risks inherent invisible and visible laser radiation. The operator is required to carefully read the section of the manual concerning safety instructions as well as the sections related to matters falling under his responsibility.

The workers assigned to the machine can be identified as:

- **OPERATOR**
  responsible for loading elements to be processed, visually checking the work cycle, removing the finished product and cleaning the machine.

- **MAINTENANCE WORKER**
  responsible for the electrical, mechanical and optical maintenance and adjustment of the machine.

NOTE:
Datalogic Automation S.r.l. declines any and all responsibility for improper use of its device.

NOTE:
BEFORE INSTALLING AND USING THE LASER, **READ CAREFULLY** THE **APPENDICES**.

OVERVIEW

The **FILOS** laser system designed and built by Datalogic Automation uses the most sophisticated technologies with regards to the mechanical-optical part, electronic control of laser power, communication and security of the entire system.

The **FILOS** laser system features a frame made in stainless steel and aluminium whose size is suited for easy integration within a system which includes the management of marking signals and other complementary units provided by the customer.

All laser system connections are located on the front of the rack: power supply, safety, signals, optic fibre.

Three fans in total were used for cooling the system; these fans were placed in order to create an air channel coming in from the rear and exiting from the front.

The system can be easily secured to the customer's frame where the laser is to be incorporated, using the 6 threaded holes with pitch.

The **FILOS** laser system can be powered with 24 V DC direct voltage or through an AC/DC power supply that ensures a whole series of EMC/SAFETY functions and compatibility which must be verified by the customer.

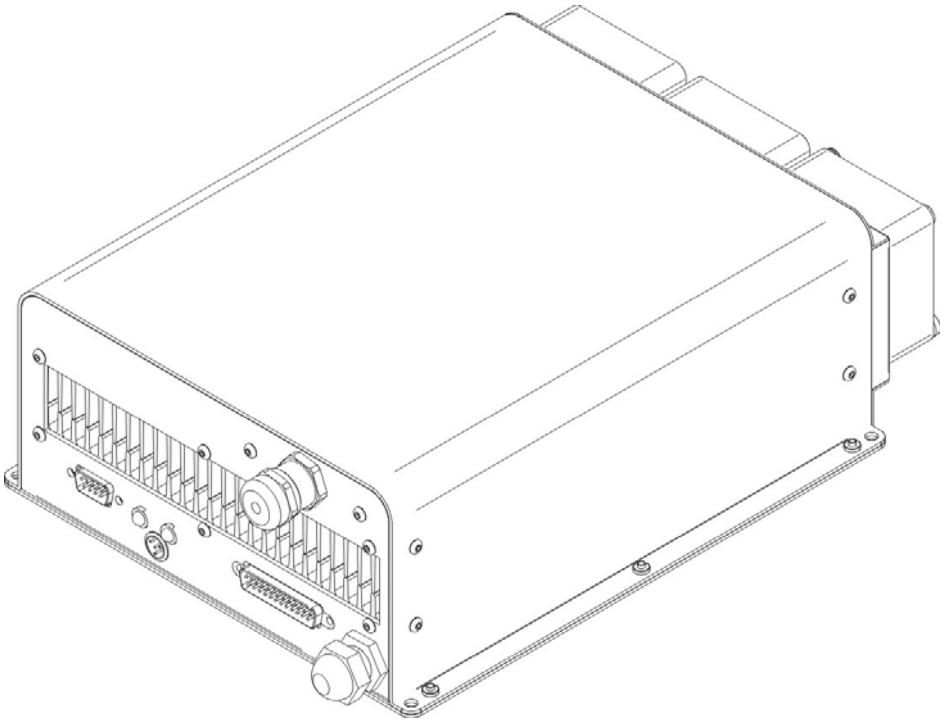

Figure 1: Filos Laser Source.

NOTE:

Laser marking may strongly interact with materials through a thermal carbonization process with the emission of fumes and vapours.

Adequate fume extractor and fume treatment must be provided for, especially when working on plastic materials such PVC.

IMPORTANT WARNINGS

Access to the internal parts of the electrical equipment is allowed only to authorized personnel, duly qualified and trained with regards to risks of an electrical nature.
Datalogic Automation S.r.l. declines any and all responsibility for work carried out on live parts by untrained or unauthorized personnel.

NOTE:

It is forbidden to change the intended use for which the system was designed and developed.
Datalogic Automation S.r.l. declines any and all responsibility for improper use of its equipment.

SUMMARY

SYMBOLS III

REVISION INDEX IV

FOREWORD V

OVERVIEW VI

IMPORTANT WARNINGS vii

SUMMARY VIII

1 TECHNICAL SPECIFICATIONS AND ACCESSORIES 10

1.1 TECHNICAL CHARACTERISTICS 10
1.2 SEALS 12
1.3 CONTENTS OF THE PACKAGING 13

2 INSTALLATION AND SET UP 14

2.1 DESCRIPTION OF THE LASER MODULES 15
2.1.1 CONTROL RACK 15
2.2 FILOS TRANSPORT 16
2.3 FIXING AND POSITIONING 17
2.4 INSTALLATION ENVIRONMENT 18
2.5 WIRING 19
2.5.1 POWER IN CONNECTION 19
2.5.2 WIRING EARTH CABLE 19
2.5.3 WIRING INTERLOCK CONNECTOR 20
2.5.4 WIRING RS232 CONNECTOR 20
2.5.5 WIRING LASER CONTROL CONNECTOR 21

3 FUNCTIONAL SPECIFICATIONS 24

4 TECHNICAL SPECIFICATION 26

4.1 EXTERNAL CONNECTORS SPECIFICATIONS 26
4.1.1 INTERLOCK PANEL CONNECTOR 26
4.1.2 INTERLOCK CONNECTOR 26
4.1.3 LASER CONTROL CONNECTOR – PANEL SOCKET 27
4.1.4 RS232 CONNECTOR – PANEL SOCKET 29
4.1.5 STATUS LED 29
4.2 ELECTRICAL CHARACTERISTICS OF SIGNALS 31
4.2.1 CONNECTION EXAMPLES 32

4.3 MAINTENANCE 33

APPENDIX A 34

POSITIONING OF EXTERNAL LABELS 35

APPENDIX B: STANDARDS 38

LASER STANDARDS 38
CE COMPLIANCE 38
FCC COMPLIANCE 38

APPENDIX C: GUIDE FOR SYSTEM INTEGRATOR 39

APPENDIX D: NOTE ABOUT LASER 40

LASER SAFETY 40
LASER RADIATION 41
ABSORPTION OF LASER RADIATION 42
CLASSIFICATION AND DANGER LEVEL 42
RADIATION VIEWING CONDITIONS 43
DIRECT VIEWING OF THE LASER BEAM 43
DIRECT VIEWING OF THE BEAM AFTER MIRROR REFLECTION 43
DIRECT VIEWING OF THE BEAM OUTPUT BY AN OPTICAL FIBER 43
DIRECT VIEWING OF THE BEAM AFTER FOCUSING 43
SCATTERED VIEWING OF THE BEAM AFTER FOCUSING 43
DNRO DETERMINATION AND O.D. OF PROTECTION GOGGLES 44
EYES AND SKIN RISKS 45
GENERAL SAFETY REGULATIONS 45
COLLATERAL RISK 45

APPENDIX F: MECHANICAL DRAWS 48

FIGURES 50

1 TECHNICAL SPECIFICATIONS AND ACCESSORIES

NOTE:
BEFORE INSTALLING AND USING THE LASER, **READ CAREFULLY** THE **APPENDICES**.

1.1 TECHNICAL CHARACTERISTICS

LASER SOURCE MECHANICAL CHARACTERISTICS

Weight	5 Kg
Height	95 mm
Width	215 mm
Depth	285 mm
IP Degree	IP20

BDO MECHANICAL CHARACTERISTICS

Weight	0,9 Kg
Diameter	55 mm
Width	212 mm
IP Degree	IP20

NOTE:
Please refer to Appendix for detailed drawings.

STORAGE CONDITIONS

Storage temperature	-10° to 60°C (14° to 140°F)
Shock and vibrations	MIL 810E “CAT 1 Basic Transportation”
Package Drop Test	70 cm

NOTE:
Since this product includes precision parts, please avoid vibration & shocks: quality may deteriorate.

ENVIRONMENTAL OPERATING CONDITIONS

	10W	**20W**
Environmental temperature	5°C to 50°C (41° to 122°F)	
Humidity	< 90% without condensation	
Altitude	< 2000 m	
Pollution Degree	2	
Overvoltage Category	II	

ELECTRICAL POWER SUPPLY

Input Voltage	24 V DC ± 8%
Input Current	8A max
Max Power	200W

PERFORMACES

Model	**Units**	**10W**	**20W**
LASER SOURCE (specification @25°C)			
Laser Type		Class 4 Pulsed Fiber Laser	
Average Power *	W	11	22
Central emission wavelength	nm	1064	
Repetition Rate	kHz	20 ÷ 100	
Laser aiming beam		Class 2 < 1mW @ 635nm	
Cooling		Forced Air	
Noise	dB(A)	70	

OTHER	
BDO CABLE minimum bending Ø	Ø 15 cm (fixed installation) Ø 30 cm (mobile installation)
BDO cable length	3 meters
Control Software	DLA Fiber Configurator
Communication / Control	RS232 / Digital DB25

** @ 20kHz at 25°C.*

1.2 SEALS

Several seals have been applied to the Filos, to both the Laser Source and the BDO.

Figure 2: Example of a seal.

The laser source has seals in some areas. The seals must not be broken or removed for any reason. The sealed parts may be opened only and exclusively by Datalogic Automation S.r.l. Breakage of these seals by a customer shall result in immediate cancellation of the warranty on the entire laser source.

NOTE:

If a customer **breaks or removes the seals placed** by the manufacturer on the laser system **the warranty** on the entire laser system will immediately become "***null and void***".

WARNING!

The manufacturer shall not be held liable for any **non conforming use** of equipment of its manufacture.

It is **forbidden** to operate the equipment before the machine it is intended for has been **declared in conformance** with statutory Directives.

NOTE:

Access to the internal parts of the electrical equipment is only permitted to **authorized personnel**, who have been trained and instructed on the electrical risks.

Datalogic Automation S.r.l. shall not be held liable for work on electrically charged parts by inadequately trained personnel!

NOTE:

Access to the internal parts of the complete laser source is only permitted to **authorized personnel**, who have been trained and instructed on the optical risks!

Datalogic Automation S.r.l. shall not be held liable for work on parts by inadequately trained personnel!

1.3 CONTENTS OF THE PACKAGING

MAIN HARDWARE

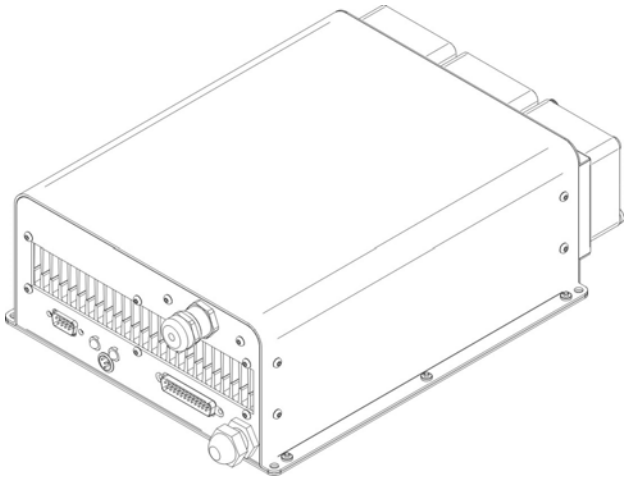

Figure 3: Control Rack.

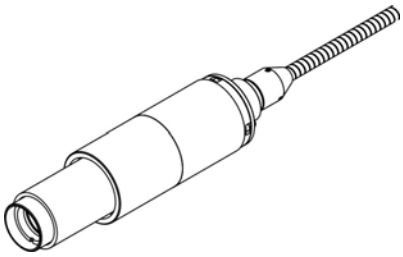

Figure 4: BDO

NOTE:
Laser Source and BDO are joined by a connection cable 3 meters long, referred as BDO Cable. Laser Source and BDO are **NOT** separable.

WARNING!
To avoid damaging or breaking the optical fiber, never subject it to a bending radius below the limits specified in the technical specification table.

CABLE AND ACCESSORIES

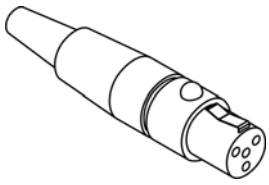

Figure 5: Interlock.

Figure 6: USB pen drive.

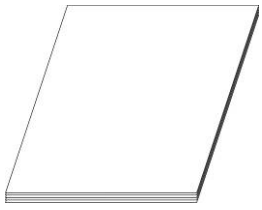

Figure 7: Quick guides.

2 INSTALLATION AND SET UP

NOTE:
Filos is a **Class 4** laser source.
For proper and safe use, it must be brought down to **Class 1**. See appendix for details.

Filos laser source device must be installed in a suitable environment specifically dedicated to laser jobs.

The person in charge of the area assigned to laser marking (the Laser Safety Officer), has to isolate this area from the other work areas and signal through suitable hazard warnings that the area assigned to laser marking can be accessed by authorized personnel only.

2.1 DESCRIPTION OF THE LASER MODULES

2.1.1 CONTROL RACK

The control rack is described here below in order to provide the right information for proper device installation.

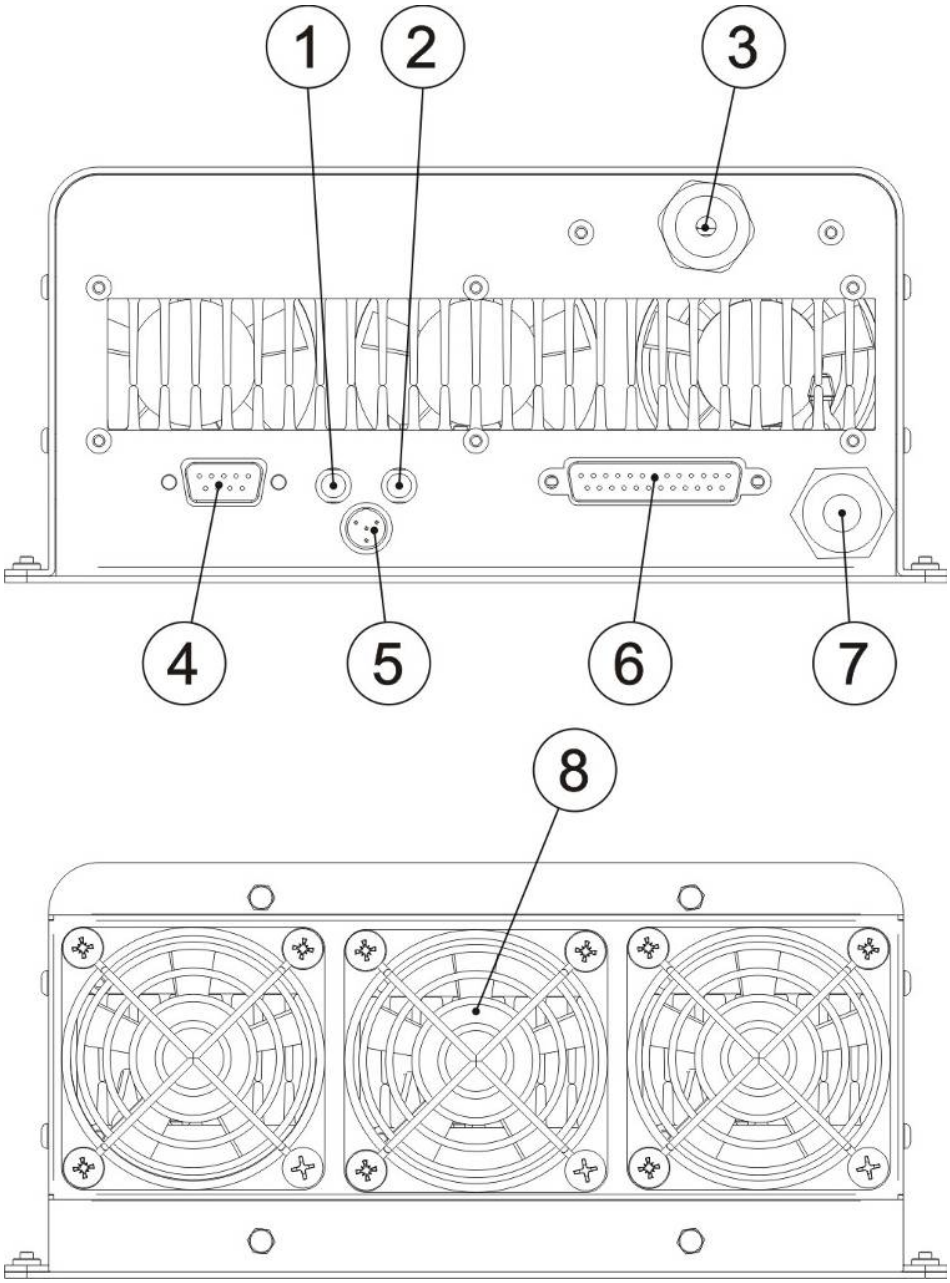

Figure 8: Control rack overview.

1) Status led (RED)	5) Interlock connector
2) Status led (GREEN)	6) Laser control (DB 25)
3) BDO	7) Power Supply
4) RS232 connector	8) Cooling fans

2.2 FILOS TRANSPORT

The device can be easily lifted up and moved by a single person thanks to its compact size and reduced weight.

NOTE:
Laser Source and BDO are joined by a connection cable 3 meters long, referred as BDO Cable. Laser Source and BDO are **NOT** separable!

WARNING!
To avoid damaging or breaking the optical fiber, never subject it a bending radius below the limits specified in the technical specification table.

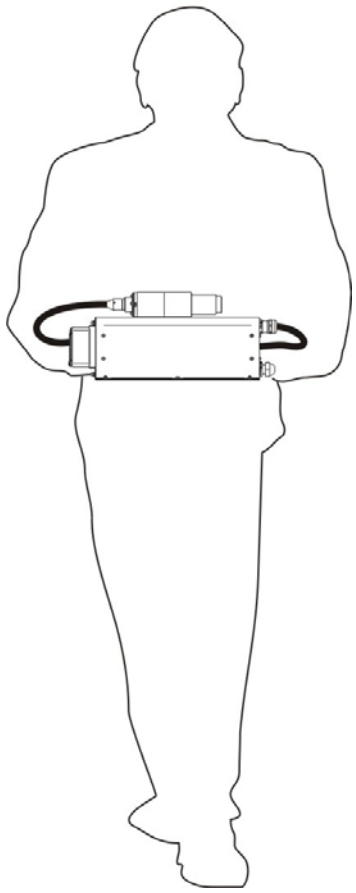

Figure 9: Filos transport.

NOTE:
The Filos laser source is a delicate opto-electronic device, avoid damaging shock and vibrations.

NOTE:
Be extremely careful to not damage the connection cable between Laser Source and BDO.

2.3 FIXING AND POSITIONING

The laser source Filos must be positioned in safety and must be followed the precautions listed below.

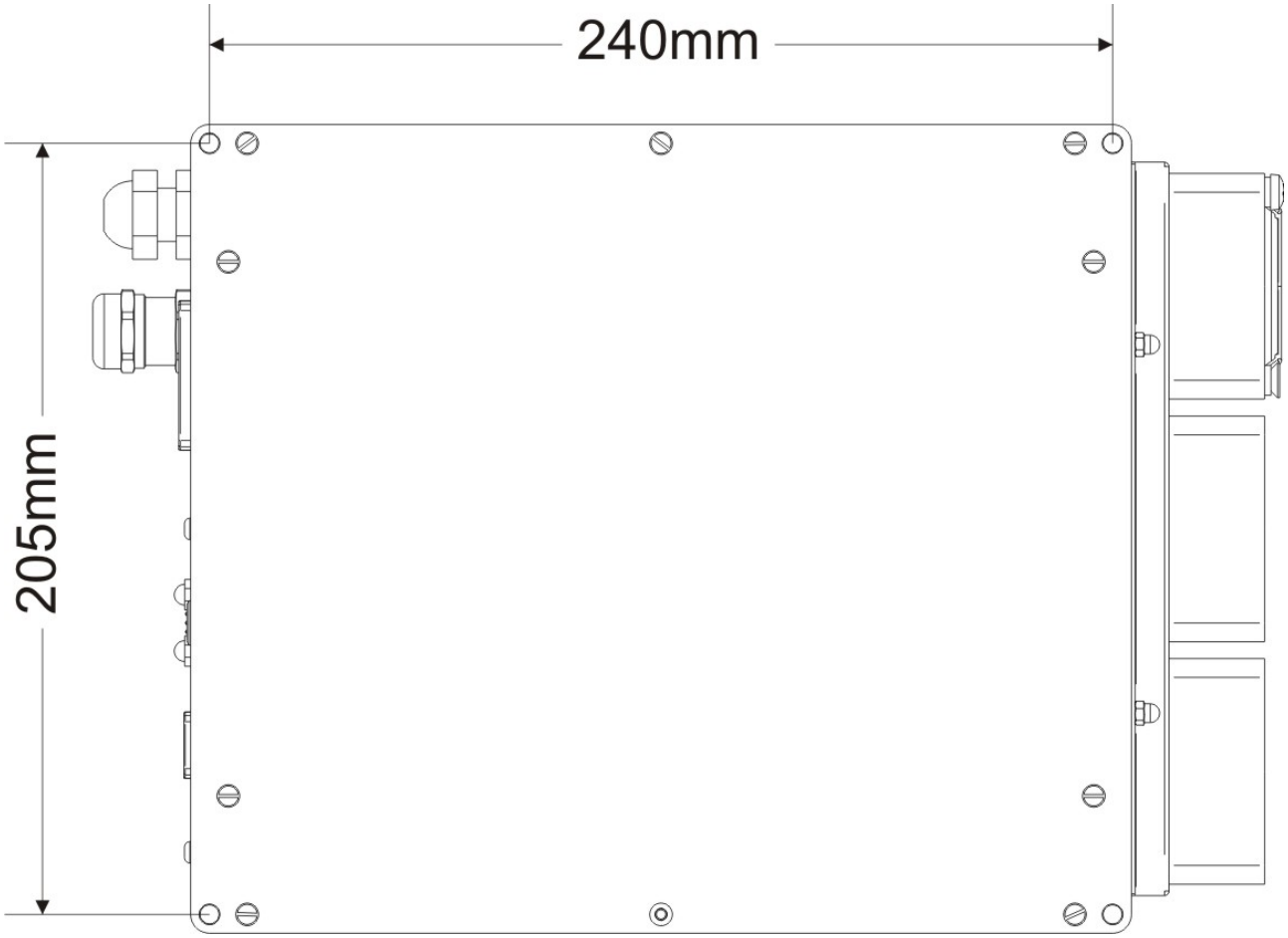

Figure 10: Fixing laser source

2.4 INSTALLATION ENVIRONMENT

The laser source must be installed in a suitable environment in order to allow proper air flow passage and correct housing of the cables. Proper air flow can only be guaranteed by assembling the cooling fans correctly.

The fans are positioned at the rear of the device, a flow needs to be provided, and the passage of air flow between the device fins must be guaranteed (see example of air flow below):

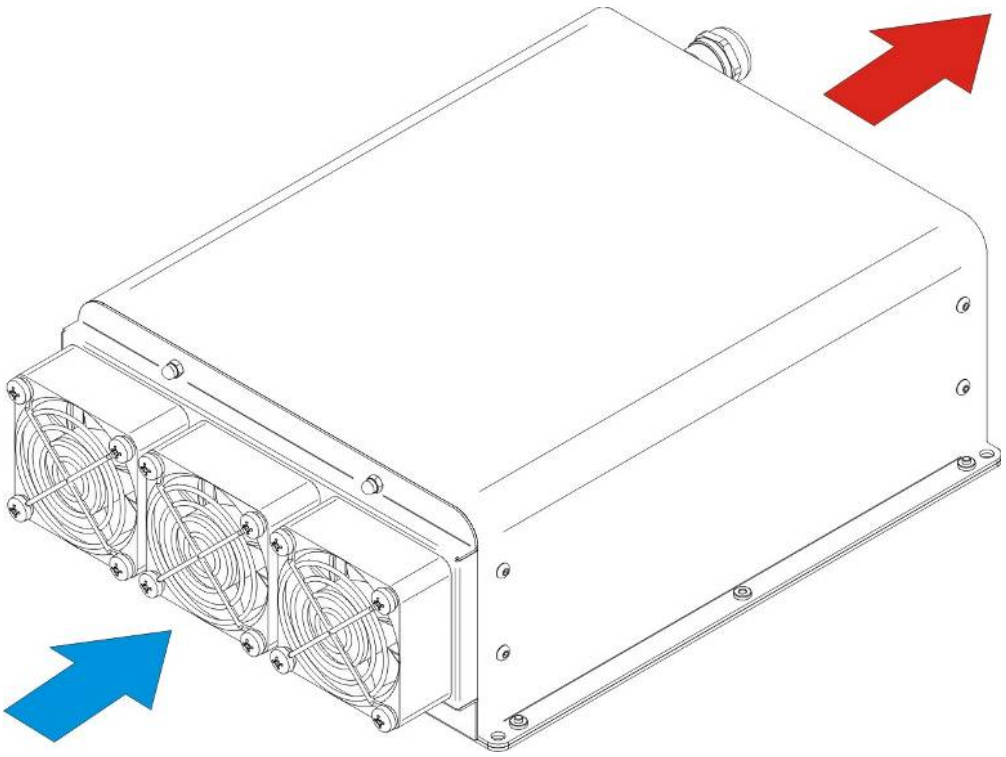

Figure 11: Correct air flow.

2.5 WIRING

The laser source wiring is described here below. Follow the wiring operations as described.

WARNING:
Wire the devices one to the other **WITH NO** voltage in order to avoid risks to the operator and to the laser source.

2.5.1 POWER IN CONNECTION

Connect the power supply and earthing cables, complying with the right polarity (+VDC, -VDC, Earth)

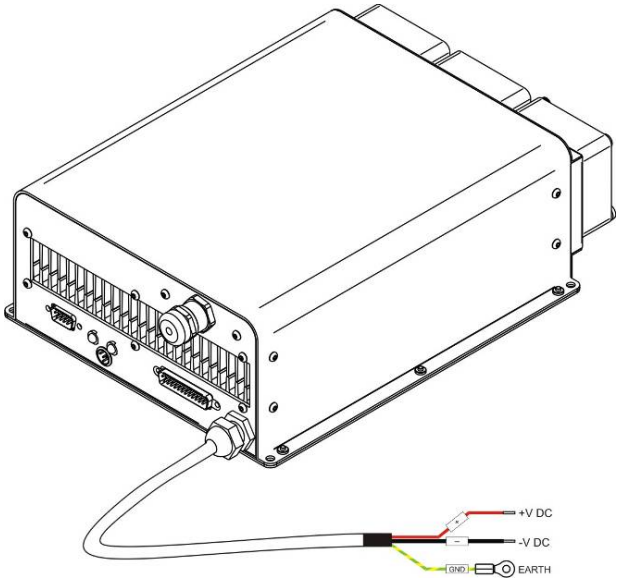

Figure 12: **Wiring of power supply cables.**

2.5.2 WIRING EARTH CABLE

To ensure high electrical noise immunity it is strongly recommend to connect Filos chassis to earth plant.

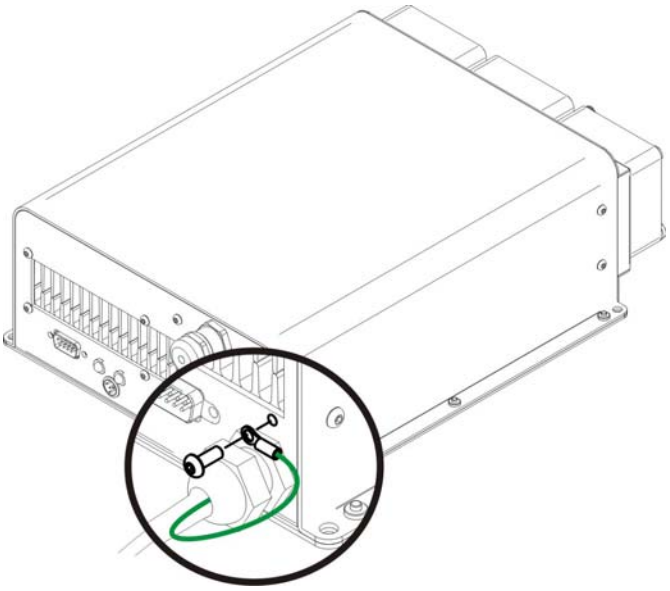

Figure 13: Wiring earth cable.

2.5.3 WIRING INTERLOCK CONNECTOR

Wiring interlock connector to rack. The absence of such connector locks the device.

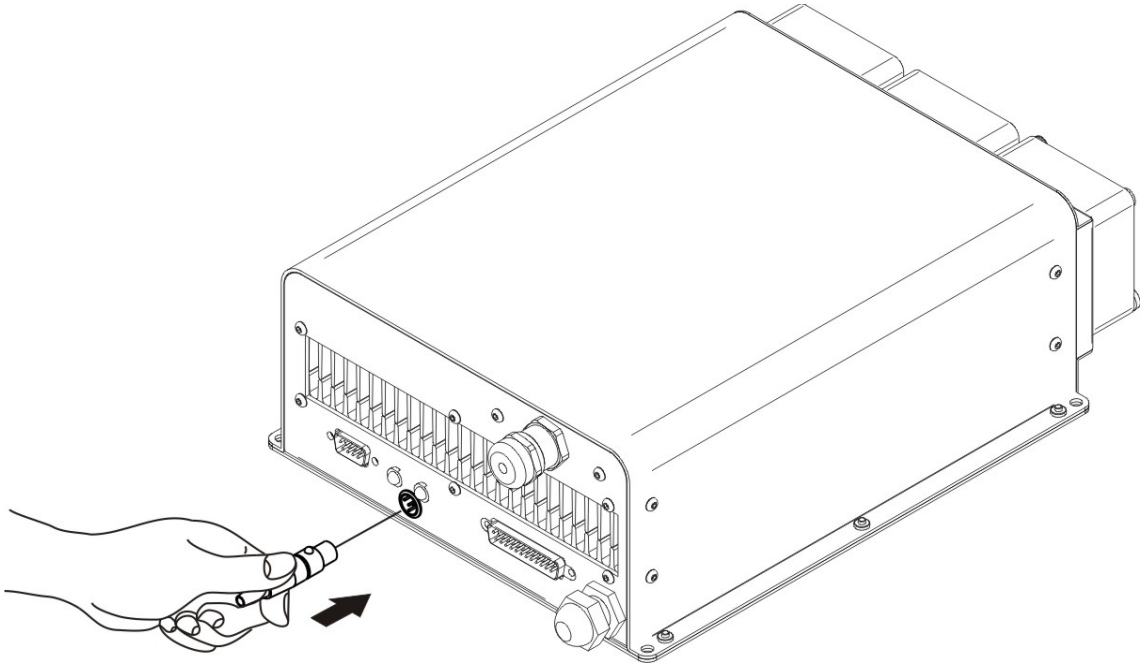

Figure 14: Wiring interlock connector.

2.5.4 WIRING RS232 CONNECTOR

Wiring RS232 connector.

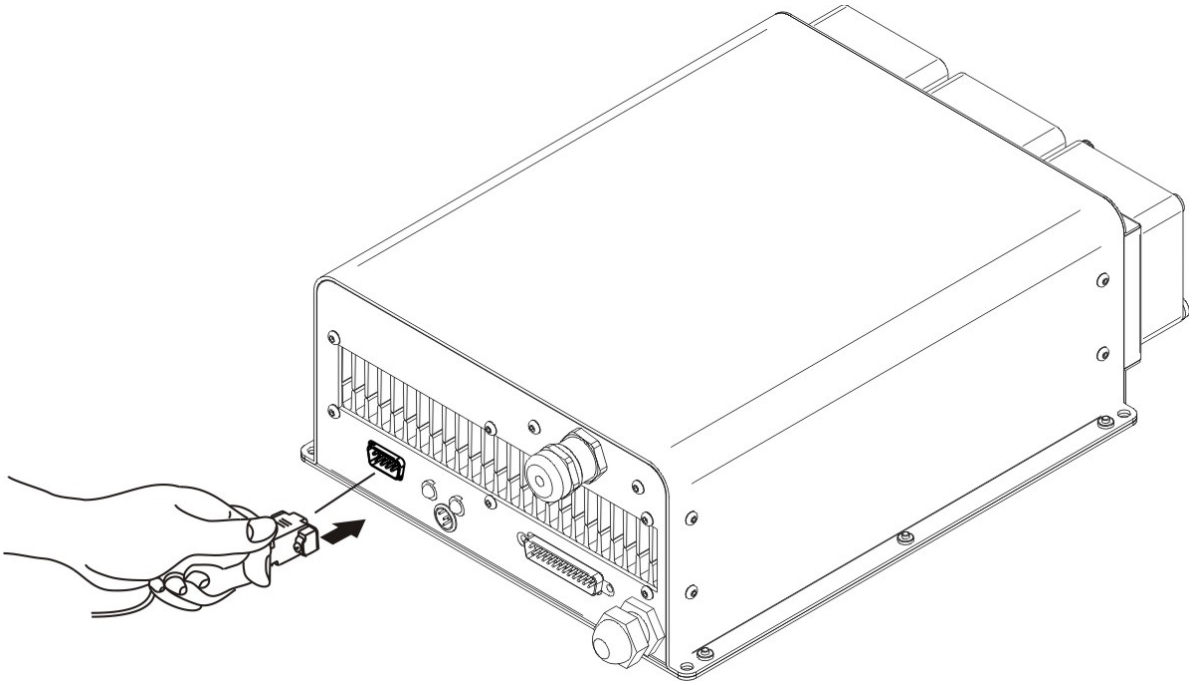

Figure 15: Wiring RS232 connector.

2.5.5 WIRING LASER CONTROL CONNECTOR

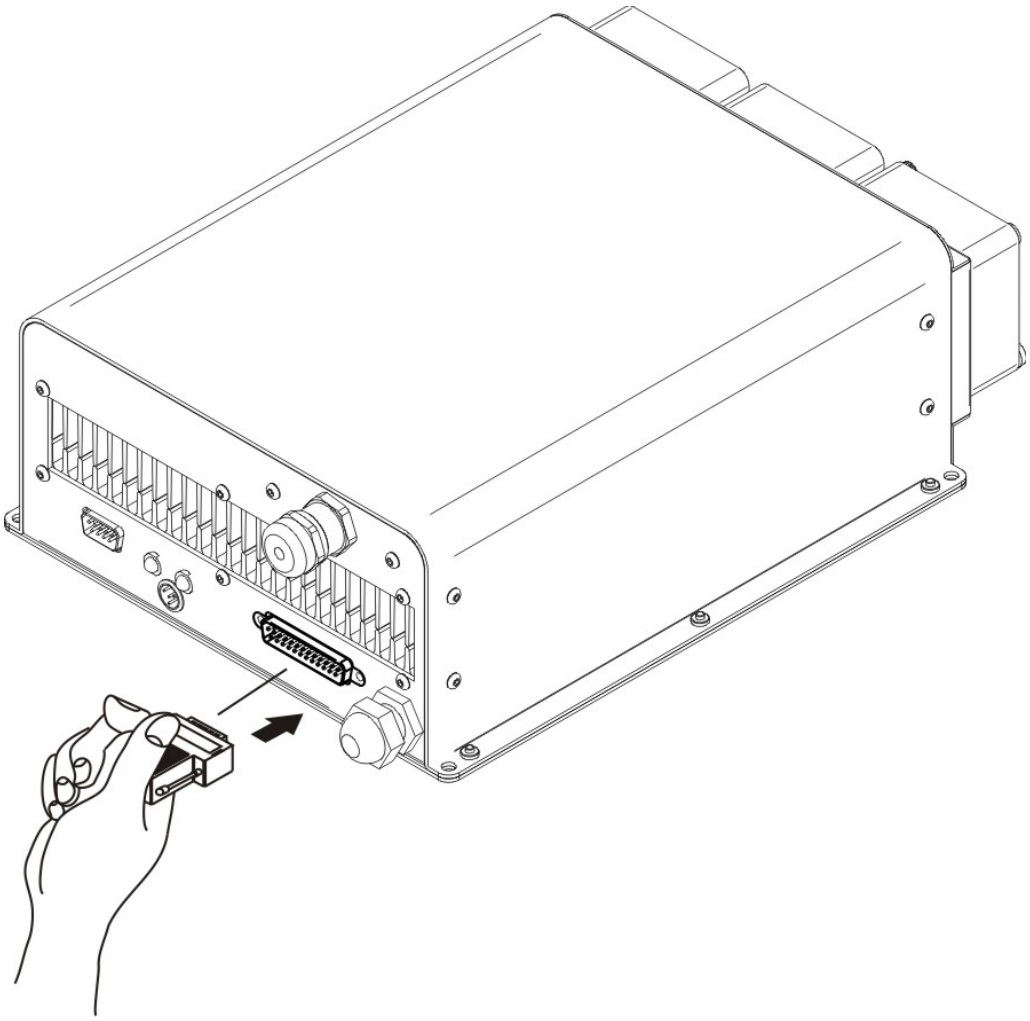

Figure 16: Wiring Laser Control connector.

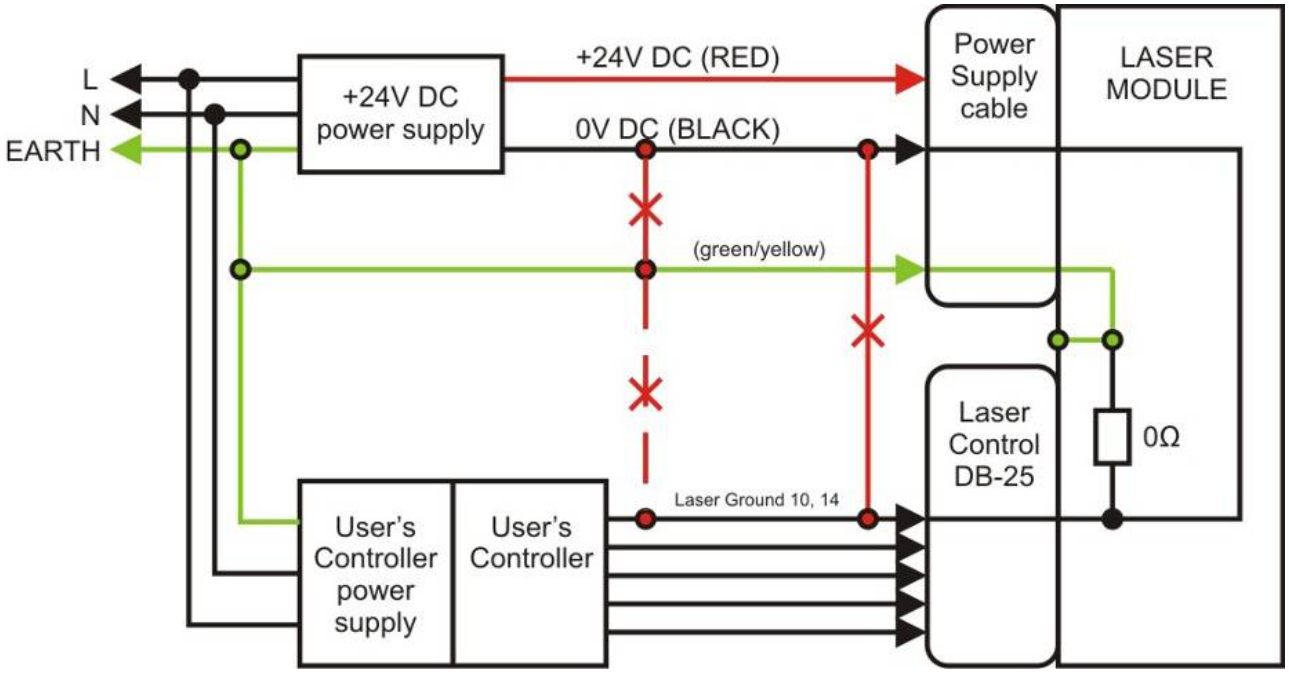

Figure 17: Recommended laser connection diagram.

Following considerations should be taken into account for correct electrical connection:

1. Main power supply should be capable to permanently supply operating current (refer to the maximum current consumption in the laser specification) and supply 50% higher peak current for short periods up to 250us. The laser consume less than 6A current, consequently peak current consumption is less than 8A. Power supply should hold the voltage, measured on the laser cable leads, within a specified range (refer to the laser specification) both for the steady and for the peak current consumptions. Supply voltage undershoots and overshoots out of the specified range may lead to a non stable laser operation.
2. Connect the power in cable directly to the power supply without the use of extension.
3. The main +VDC supply should have floating outputs. Its return wire should be connected only to the laser power supply cable (black wire). Wrong connections, which may create current loops (shown in the diagram above as the crossed red wires) should be avoided.
4. Laser ground (DB-25 pins 10-14) and laser supply +VDC return (black wire) are connected inside the laser module. No connections are allowed between these terminals outside of the laser module.
5. Inside the module common ground is connected to the laser housing via 0 Ohm resistor.

NOTE:

Controller's card ground may be connected to the earth by design. If it is not, and the controller electronics has the floating ground, it should not be connected neither to the black not to the yellow/green wires of the +VDC laser supply cable (the crosses dashed red wire on the diagram).

CHAPTER 2

3 FUNCTIONAL SPECIFICATIONS

1ST step: Remove the protection cap from the optical laser output and make the appropriate termination.

2ND step: Check presence of the laser module to the control system via 25-pin connector (Laser Control). Use pins according to the description table 1 (refer to page 27).

3RD step: Check presence of interlock connector.

4TH step: Make sure that control pins are properly initialized:

- Pins 18, 19, and 22 are LOW
- Pin 20 with repetition rate within specified range

5TH step: Connect +VDC power supply source to the laser and apply the voltage to the laser as described above.

6TH step: In 5 seconds after supplying +VDC power (warm-up time) the laser is ready for operation.

NOTE:
It is allowed to supply +VDC main voltage first and later initialize control signals.

NOTE:
If ENABLE is ON (PIN 18 HIGH) during the power up, the system returns message error: “ENABLE NOT ALLOWED”. In order to reset this status switch ENABLE OFF and ON again.

7TH step: Set desired power via pin 1-8.

8TH step: Switch the ENABLE (MO) ON applying HIGH to the pin 18.

9TH step: Laser is ready for fast modulation via Pin 19 (EMISSION). It is possible to apply HIGH and LOW sequence to switch the laser ON and OFF correspondingly. For typical specification of 250us rise/fall times modulation period should be longer than 500us (corresponding frequency 2kHz).

10TH step: After completing a sequence of laser ON/OFF switches and awaiting next one it is recommended to switch OFF the Enable (MO) if the delay between sequences is more than 10s. This will spare electrical consumption, avoid unnecessary wear of the Enable and exclude remnant Enable power at the laser output.

11TH step: After finishing a job, switch OFF the Emission (BS) and Enable(MO) (set LOW to pin 18 and pin 19).

12TH step: Remove +VDC power supply voltage.

OPERATION FEATURES

1. PRR can be changed during laser operation by applying the appropriate signal to the pin 20. When varying PRR, be sure that the emission signal (PIN 19) should stay LOW for at least 50ms. Otherwise, the safety circuit will not detect the variation of PRR.
   NOTE: If the PRR is higher/lower than maximum/minimum allowed PRR, the safety circuit will limit the PRR to the allowed values.
2. The power setting can be changed during laser operation by applying updated levels to pin 1-8. Laser response time to the power setting change is within specified delays times (AC table).
3. If pins 18 and 19 are in LOW state, there is no laser radiation at the operating wavelength.
4. If the Enable (MO) is ON, and the Emission (BS) is OFF, there is laser radiation at the operating wavelength with the power output lower than 15mW.
5. If the Enable (MO) is ON and the Emission (BS) is ON with zero power settings (all pins 1-8 were LOW during latching power into the laser) the remnant average power at the output is also less than 1W.
6. The Aiming Beam can be switched ON during laser operation using pin 22.

NOTE:
The laser automatically switches OFF, if the module temperature rises above +70°C. The appropriate alarm signal combination appears on the alarm pins 16 and 21. When the temperature drops down below +70°C the laser does not recover the emission and holds the alarm pins unchanged until switching OFF main power supply.

4 TECHNICAL SPECIFICATION

4.1 EXTERNAL CONNECTORS SPECIFICATIONS

4.1.1 INTERLOCK PANEL CONNECTOR

Interlock turns completely OFF Class4 laser source.
Type SWITCHCRAFT TB Series male Tini Q-G (Mini XLR) panel mount connector, 4 ways.

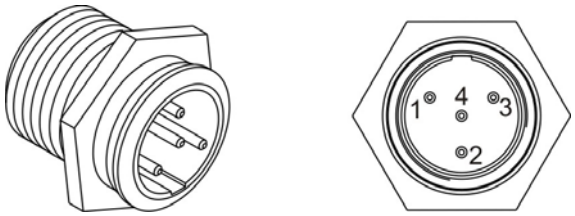

Figure 18: Male panel plug cod. TB4M (front view).

PIN	SYMBOL	TYPE	DESCRIPTION
1	VCC	OUTPUT	5V DC power supply
2	INTERLOCK A	INPUT	Interlock signal A

Table: Interlock plug Pin-out.

4.1.2 INTERLOCK CONNECTOR

Connector type SWITCHCRAFT TA Series Tini Q-G (Mini XLR) female cable mount connectors, 4-way.

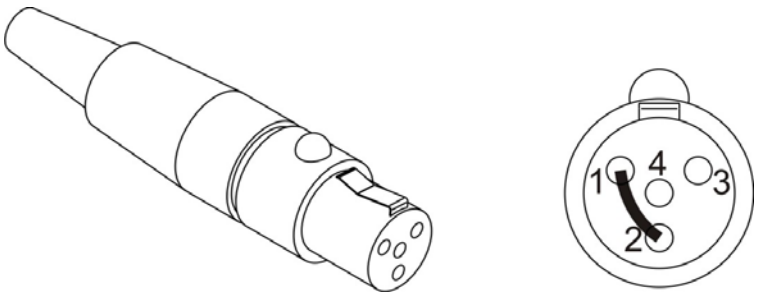

Figure 19: Female cable mount connector cod. TY4F (solder view).

4.1.3 LASER CONTROL CONNECTOR – PANEL SOCKET

Panel socket SUB-D, 25 pol, female. All control pins are TTL compatible, unless otherwise noted in the pin description. For the interface designs level ranges of the TTL standard should be taken into consideration.

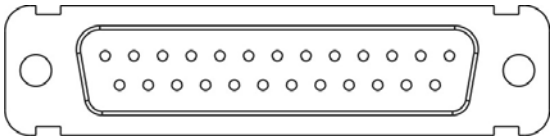

Figure 20: Female panel socket SUB-D 25 (frontal view).

<table>
<tr><th>PIN</th><th>DESCRIPTION</th></tr>
<tr><td>1-8
(D0-D7)</td><td>Power Setting (0-FFh in hexadecimal or 0…255 in decimal formats).
LSB (D0) corresponds to Pin number 1, MSB (D7) corresponds to pin 8.
00h (0): Minimum output power
FFh (255): Maximum output power
Disconnected corresponds to 00h.</td></tr>
<tr><td>9</td><td>Not connected</td></tr>
<tr><td>10, 14</td><td>Ground</td></tr>
<tr><td>13</td><td>Not connected</td></tr>
<tr><td>15</td><td>+5 V DC power output (current limit at 50mA)</td></tr>
<tr><td>16, 21</td><td>Laser alarms status.
<table>
<tr><td>Pin 16</td><td>Pin 21</td><td>Status</td></tr>
<tr><td>LOW</td><td>LOW</td><td>Laser temperature is out of operating temperature range</td></tr>
<tr><td>LOW</td><td>HIGH</td><td>Normal operation</td></tr>
<tr><td>HIGH</td><td>LOW</td><td>Reserved</td></tr>
<tr><td>HIGH</td><td>HIGH</td><td>MO failure</td></tr>
</table></td></tr>
<tr><td>17</td><td>Not connected</td></tr>
<tr><td>18</td><td>ENABLE input (MO) ON/OFF signal.
HIGH: ENABLE ON
LOW or disconnected: ENABLE OFF</td></tr>
<tr><td>19</td><td>EMISSION input (BS) ON/OFF signal.
HIGH: EMISSION ON
LOW or disconnected: EMISSION OFF</td></tr>
<tr><td>20</td><td>Pulse Repetition Rate (Synchronization) input, square wave. Refer to the specification for operating PRR range. Allowed duty cycle 0.1 to 0.9.</td></tr>
<tr><td>22</td><td>AIMING BEAM (red diode) ON/OFF input.
HIGH: ON
LOW or disconnected: OFF</td></tr>
<tr><td>23</td><td>Not connected</td></tr>
<tr><td>24</td><td>Led 1 Not connected</td></tr>
<tr><td>25</td><td>Led 2 Not connected</td></tr>
</table>

Table 1: Laser connector pinout

CONTROL INTERFACE DESCRIPTION

1. The laser is controlled via signals applied to the DB-25 connector. Please refer to the connector interface description table above for pin designation and operating levels.
2. Pins 1 to 8 are the 8 bit bus for the output power setting. Pin 1 is the least significant bit and pin 8 is the most significant bit. Codes in the range 0…255 should be applied to these pins, which correspond to the power tunability 5…100% of the specified nominal value.

Note: optical output power is directly proportional to the settings.

3. Pin 9 not connected: the latch is configured in “transparent” mode.
4. Pin 16 and 21 are the alarm outputs. These pins indicate the following device states:

Pin 16	Pin 21	Alarm status
LOW	LOW	Laser temperature is out of operating temperature range*
LOW	HIGH	Normal operation
HIGH	LOW	Reserved
HIGH	HIGH	MO failure

* In the case of temperature alarm, Enable and Emission can not be switched ON until the error flag is reset.

To reset the flag: switch OFF and ON 24VDC main power supply

5. Pin 15 is an auxiliary +5VDC power supply voltage
6. Pin 18 is the ENABLE (MO) ON/ OFF signal. The Enable should be switched ON at least 1s before switching ON the EMISSION (BS). It can be switched OFF simultaneously with Emission. After switching ON the Enable, the laser starts to consume more electrical power.

NOTE:
If ENABLE is ON (PIN 18 HIGH) during the power up, the system returns message error: “ENABLE NOT ALLOWED”. In order to reset this status switch ENABLE OFF and ON again.

7. Pin 19 is the EMISSION (BS) ON/ OFF signal. Apply HIGH to switch ON the Emission and LOW to switch it OFF. The laser starts to emit optical power within specified delay after setting the pin to HIGH level and stops to emit with specified delay after setting to LOW level. Refer to the laser optical specification for the laser average power rise time and fall times. Modulation with period shorter than sum of the rise and fall times (the laser response time) may lead to the non adequate laser power behaviour and significant optical over/undershoot. For the laser with less than 250us specified rise and fall times, the minimum modulation period should be longer that 500us.
8. Pin 20 is the Synchronization input. Pulse Repetition Rate (PRR) within specified operating range should be applied to the pin (refer to the optical specification for PRR limits). The laser emits pulses simultaneously with the rising edge of the signal.

   Note: In case of supplying PRR out of the specified range (or missing the signal) the laser safety circuit will substitute missing pulses or limit the PRR.

   PRR can be changed during laser operation by applying the appropriate signal to the pin 20 (see pag. 25 “Operation Features” for more details.
9. Pin 22 is the Aiming Beam control line. Apply HIGH to switch the Aiming Beam ON and LOW to switch the Aiming Beam OFF

4.1.4 RS232 CONNECTOR – PANEL SOCKET

This connector is used only for service applications (firmware upgrade and debug tool).

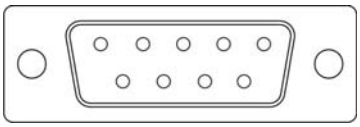

RS communication is useful for monitoring laser status, controlling frequency, pulse width and power at low speed toggling. Connect any RS232 device to the RS connector. RS can be used through PC, with the software DLA Fiber configurator supplied by Datalogic Automation.
RS connector Pin out:

Pin	Name	Laser I/O	Remarks
2	Laser Tx	O	Laser transmit
3	Laser Rx	I	Laser receive
5	Ground	-	

4.1.5 STATUS LED

GREEN	RED	STATUS
OFF	OFF	Power OFF
ON	OFF	Power ON
ON	BLINK	ENABLE ON / EMISSION OFF
ON	ON	ENABLE ON / EMISSION ON
BLINK	ON	General Error
BLINK	BLINK	Reserved

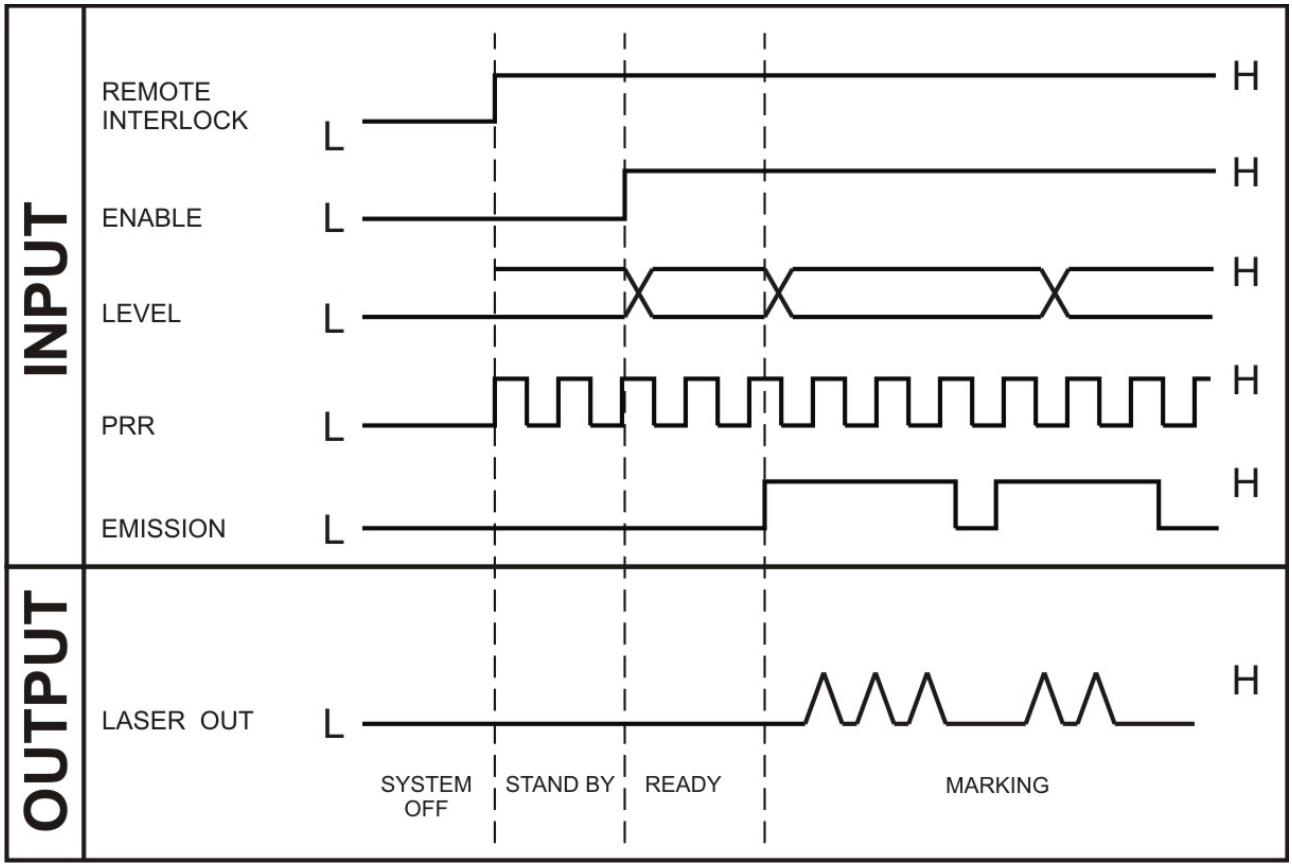
INPUT
REMOTE INTERLOCK
ENABLE
LEVEL
PRR
EMISSION
L
H
OUTPUT
LASER OUT
SYSTEM OFF
STAND BY
READY
MARKING

4.2 ELECTRICAL CHARACTERISTICS OF SIGNALS

DC CHARACTERISTICS				
	Min	**Max**	**Unit**	**Note**
V_Supply	22	26	Volt	Typical: 24 (6A max)
V_Input	0	5	Volt	
V_Output	0	5	Volt	
V_IH Digital High Level Input voltage	3,5	5	Volt	
V_IL Digital Low Level Input voltage	0	1	Volt	
I_IH Digital High Level Input current	1		mA	
I_IL Digital Low Level Input current	1		mA	
V_OH Digital High Level Output voltage		5	Volt	
V_OL Digital Low Level Output voltage		400	mVolt	
I_OH Digital High Level Output current		10	mA	Push Pull
I_OL Digital Low Level Output current		10	mA	Push Pull

AC CHARACTERISTICS				
	Min	**Max**	**Unit**	**Note**
Diode Current bandwidth response		20	kHz	-3dB
Setting time		150	µsec	
Diode Current Slew rate		50	µsec	From 1 to 10 Amp
Modulation Freq	20	100	kHz	

4.2.1 CONNECTION EXAMPLES

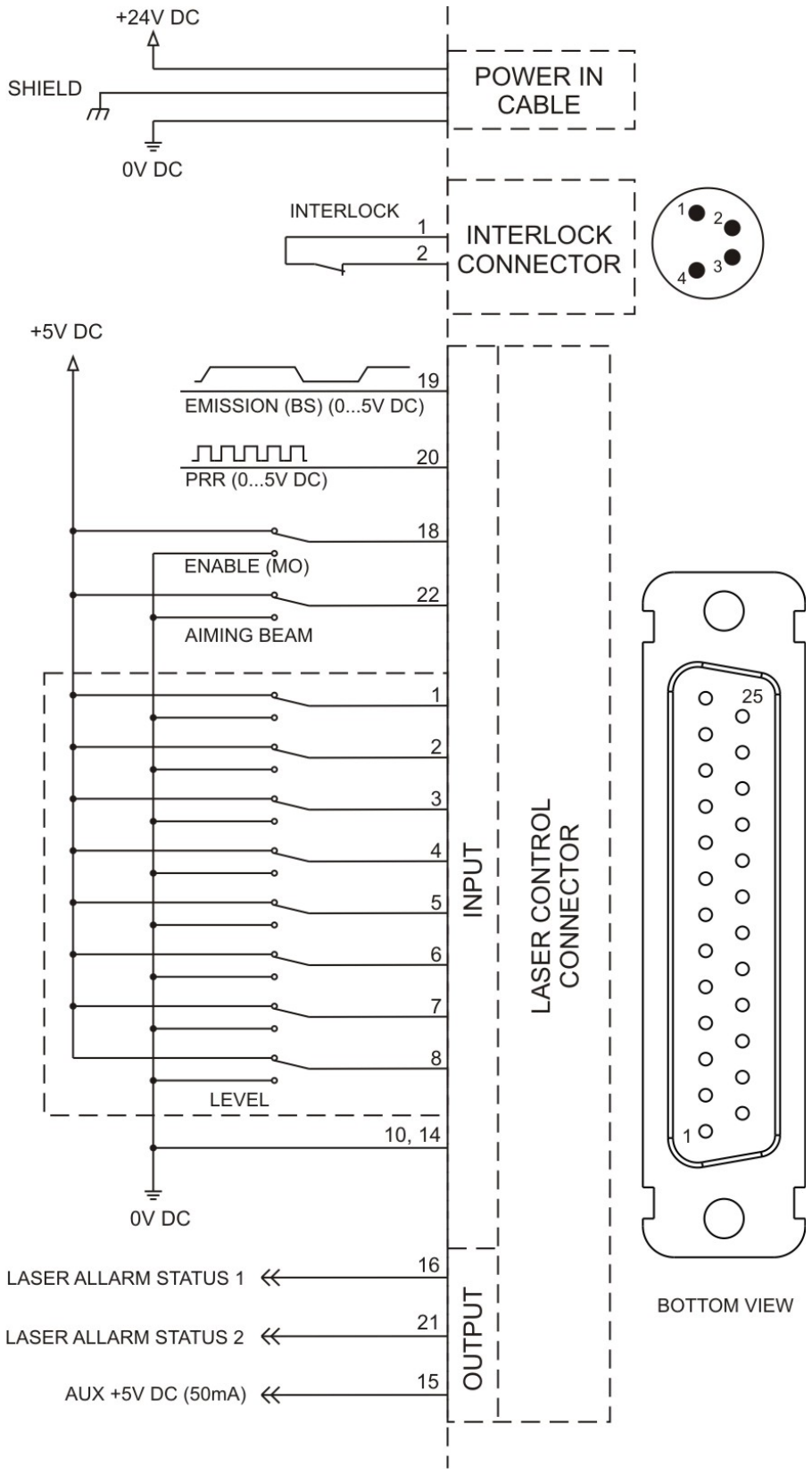

Figure 21: External connection example.

4.3 MAINTENANCE

The ordinary maintenance program foresees only some operations that consist in a mere “check” of the operating condition.

The maintenance activities must be done in respect of law prescriptions regarding the safety rules during the operations.

The following parts/functions have to be controlled:

MAINTENANCE PROGRAM

COMPONENT OR FUNCTION	TYPE OF OPERATION	INTERVALS
Laser Output window	Check / Clean	Weekly: wipe gently with a dry cloth (or acetone / ethanol) or clean it with air blowing

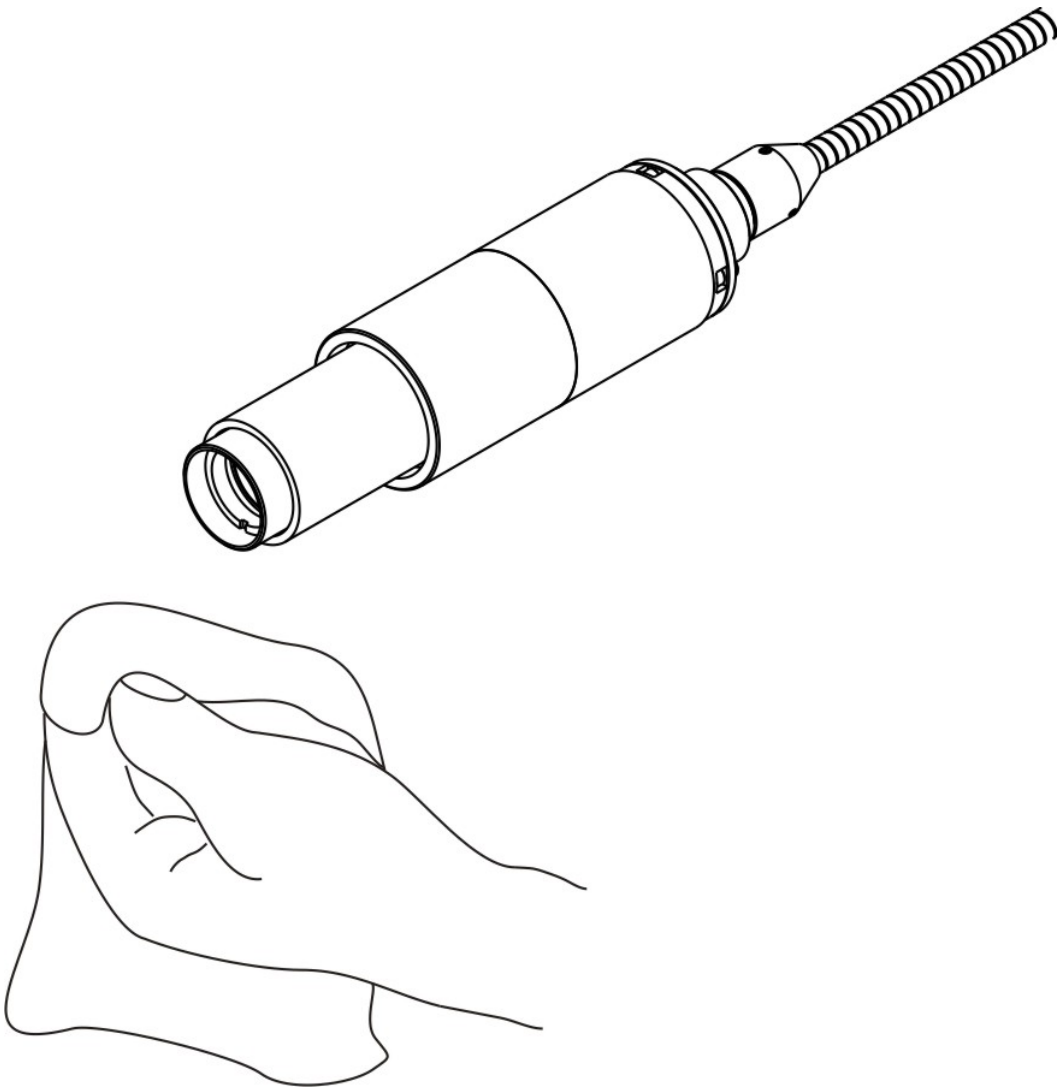

Figure 22: Cleaning laser output.

APPENDIX A

LABEL	DESCRIPTION
	Identification label
	Warning logotype (Laser)
	Laser Label*
	Aperture Label (on BDO)
	Component for incorporation
INTERLOCK	**Interlock Connector.**
RS232	**RS232 connector.**
LASER CONTROL	**DB25 laser control connector.**
POWER	**Power Supply cable.**

* Maximum output of laser radiation as per definition 3.55 of IEC60825-1 considering single fault conditions.

POSITIONING OF EXTERNAL LABELS

Positioning of labels on the Laser Sourde:

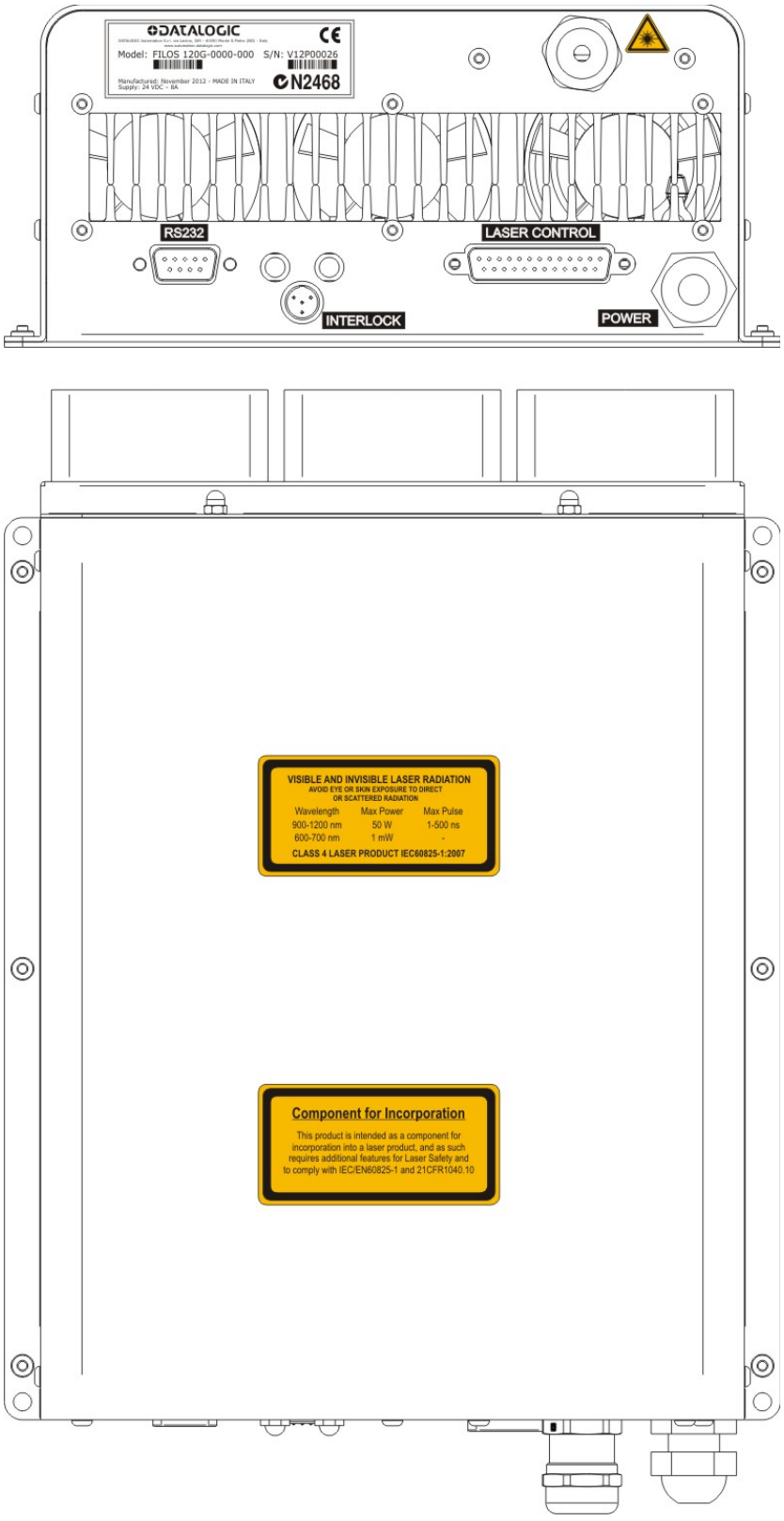

Figure 23: External labels laser source location.

Positioning of labels on the BDO:

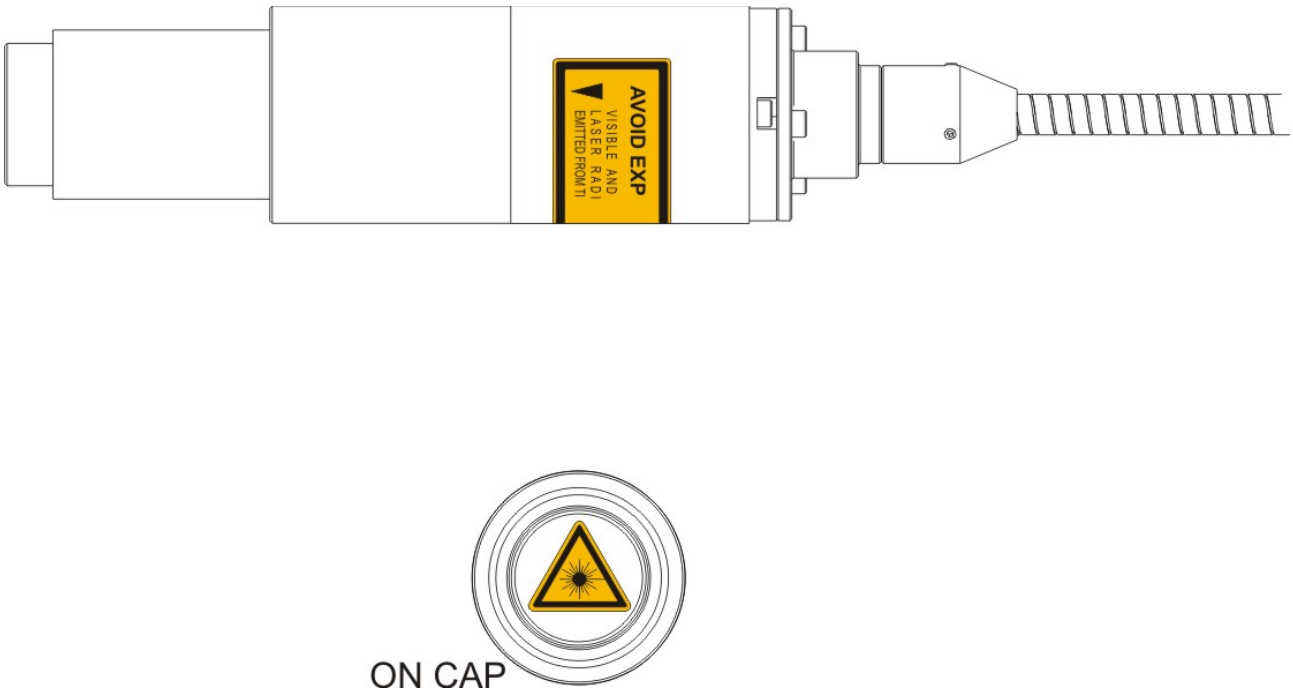

Figure 24: External labels BDO location.

APPENDIX A

APPENDIX B: STANDARDS

LASER STANDARDS

The Filos is designed to comply with the applicable sections of these laser standards:

EU : EN60825-1
USA : 21 CFR 1040.10

Filos is classified as Class 4 Laser Product.

Datalogic Automation S.r.l., as manufacturer of Filos laser source, provides a laser device which is NOT intended for immediate use, but it must be connected, by others, to other devices which have the final aim of creating a laser processing system.

The system manufacturer MUST ensure the safety of the laser processing machine according to its standards including the risk-analysis, implementation of safety measures, certification and testing of safety measures and the production of adequate information for use of the machine.

Datalogic Automation S.r.l. is available for providing to the system integrator/OEM all the information in its possession to help in complying with applicable standards.

CE COMPLIANCE

See Declaration of Conformity.

WARNING!
This is a Class A product. In a Class B environment this product may cause radio interference in which case the user may be required to take adequate measures.

FCC COMPLIANCE

Modifications or changes to this equipment without the expressed written approval of Datalogic could void the authority to use the equipment.

This device complies with PART 15 of the FCC Rules. Operation is subject to the following two conditions: (1) This device may not cause harmful interference, and (2) this device must accept any interference received, including interference which may cause undesired operation.

This equipment has been tested and found to Comply with the limits for a Class A digital device, pursuant to part 15 of the FCC Rules. These limits are designed to provide reasonable protection against harmful interference when the equipment is operated in a commercial environment. This equipment generates, uses, and can radiate radio frequency energy and, if not installed and used in accordance with the instruction manual, may cause harmful interference to radio communications. Operation of this equipment in a residential area is likely to cause harmful interference in which case the user will be required to correct the interference at his own expense.

APPENDIX C: GUIDE FOR SYSTEM INTEGRATOR

Filos products are classified as Class 4 Laser product. They are intended to be installed in a system by system integrator/OEMs which has the final responsibility of the end product Classification.

Final system MUST comply to all requirements in order to classify the system as:

- CLASS 1 LASER PRODUCT if end user could be exposed to a radiation not exceeding the AEL for Class 1 during marking operation (1070nm).

- CLASS 2 LASER PRODUCT if end user is not exposed to a radiation during marking but could be exposed to the radiation not exceeding the AEL for Class 2 during focusing and aiming (700nm).

Filos products are designed to easily fulfil all the requirement as per EU/USA standards.

Below a YES/NO table for features of Class 4 Laser. A "NO" in the Filos column means that the feature is available through dedicated connector and MUST be completely implemented by the system integrator/OEM.

FEATURE	LOCATION/DESCRIPTION	required by USA STANDARDS	required by EU STANDARS	FILOS
KEYSWITCH	FINAL SYSTEM On/Off key switch controls power to laser electronics. Key can not be removed from switch in "On" position	YES	YES	NO
SHUTTER FUNCTION	OUTPUT WINDOW Beam stop or attenuator	YES	YES	NO
LASER ON INDICATOR	FINAL SYSTEM Indicates that laser is ready to emit according to the state	YES	YES	NO
DELAY	FINAL SYSTEM User selectable delay after ENABLE INPUT	YES	NO	NO
Power Fail Lockout	FIOLS Disable current driver/laser output if input power is removed then later reapplied (AC or DC power supply failure or remote interlock actuation) while laser emitting o ready to emit	YES	NO	YES
Remote Interlock	Panel connection Disables current driver/laser output when a remote interlock switch on an equipment door or panel is opened	YES	YES	YES
Warning Label	External / Internal	YES	YES	YES*

* Filos labels comply with Class 4 Laser Product Requirement. The labels to be used in the machine where Filos are installed MUST comply with the requirements for the Laser Class of the machine itself.

APPENDIX D: NOTE ABOUT LASER

LASER SAFETY

The following information is provided in compliance with regulations set by International Authorities, and it refers to proper use of Filos.

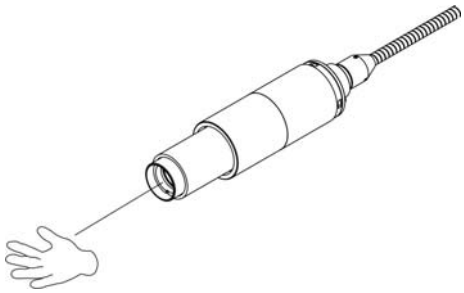

NOTE:
It is crucial that you protect yourself against beams of reflected or direct light as they cause permanent damage to your skin.

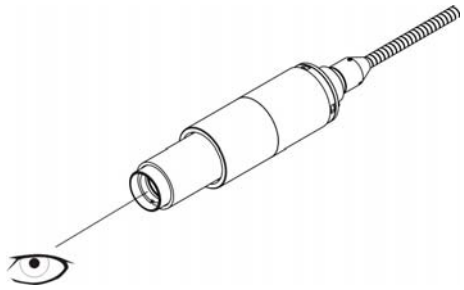

NOTE:
Staring directly at a laser beam may cause irreversible damage to your eyes.

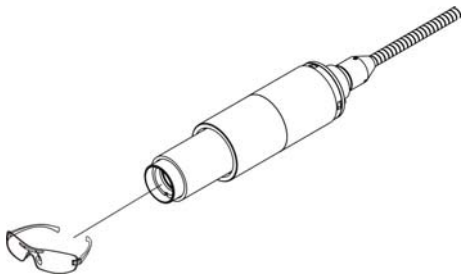

NOTE:
Wear safety goggles while using the machine!

NOTE:
BEFORE INSTALLING AND USING THE LASER, **READ CAREFULLY** THE APPENDIX CONCERNING **LASER SAFETY.**

LASER RADIATION

Laser radiation is an electromagnetic emission with a micrometric wavelength which ranges from the long infrared (CO_2 Laser), close infrared (Nd:Yag, Nd:YVO_4), visible (He:Ne or Argon) and ultraviolet (excimer laser).
It should be considered non-ionizing Radiation. In Filos laser, the emission of a doped fiber is stimulated by "optical pumping" generated by a Diode Laser. The continuous reflection of Photons, between a front mirror and rear mirror, creates a positive reaction so that their number continues to increase, until reaching the concentration necessary to produce a beam which projects from the semi-reflecting front mirror. The radiation (which we can imagine as a "Beam of invisible light") is then Collimated with Lenses at a point where the intensity becomes high enough to be able to react with various materials producing an alteration in them due to thermal effect.
The radiation of Filos laser is invisible and the Eye receives it almost in its entirety without using the natural defense provided by pupil reflex! Added to this is the fact that it is generally very intense, with the result that it can be very harmful to the eye and present vision problems.

NOTE:
Directly viewing a Laser beam **can cause irreversible damage** to vision.

To prevent permanent damage to vision, a few precautions must be taken.
All individuals who may be exposed to dangerous levels of laser radiation, must know that the laser is active and wear protective goggles if necessary.

Due to its high power, the laser integrated in the Datalogic Automation system provokes reflected laser light from flat surfaces. Reflected light is potentially dangerous for the eyes and skin. Electromagnetic emission with a micrometric wave length is placed in long infrared, and is therefore invisible, thus it is not clear where reflected beams are aimed.

NOTE:
It is indispensable to protect yourself from reflected light beams, because they can be sufficiently intense to create permanent injury to the eyes or skin.

In addition to possible injury to the eyes or skin, direct laser emission can cause flammable materials to burn like organic solvents (alcohol, acetone) or gasoline and cause fabric and clothing to burn.

NOTE:
This laser is classified as **class 4**. Class 4 includes lasers which can produce risks, not only from **direct** or **reflected** radiation, but also from **scattered** radiation! The laser sources may be a significant risk for the skin and risk of burning flammable materials.

ABSORPTION OF LASER RADIATION

Human skin absorbs electromagnetic radiation in different ways depending on the wave length of the radiation. Both the eye and skin have a “predisposition” for accepting certain wave lengths, and are more unresponsive to absorbing others. In the specific case of the Eye, the Cornea and Crystalline lens let all the wave lengths from 400 to 1400 nm pass and reach the Retina, even with various attenuations. They include the range from visible light to IRA infrared. Thus Nd:YVO4 laser radiation (1064 nm wavelength) is included in this range and **leads to direct Retina exposure!**
In terms of the Skin, the “biological window” has different absorption percentages but is not dissimilar in terms of wave length. The maximum exposure values for Skin are much different compared to those tolerated by the Eye.

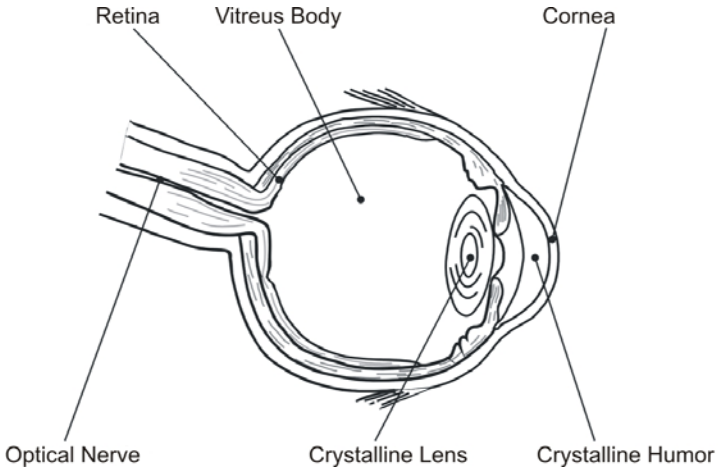

Figure 25: Eyeball section.

In terms of the damage mechanism that absorbed radiation can cause, it also depends on the wave length. Short lengths (ultraviolet: UV-C 180-280nm; UV-B 280-315 nm, UV-A 315-400 nm) generally cause photo-chemical effects:

- cataract, or opacification of the crystalline lens
- melanic coloring, or reddening of the skin

Greater wavelengths (infrared: IR-A 780-1400 nm; IR-B 1400 3000 nm; IR-C 3000-10^{E6} nm) generally cause thermal effects:

- detachment or photocoagulation of the retina
- burning of the skin

The degree of injury obviously depends on the **amount of absorbed radiation** and the **instantaneous power** of the radiation source.

CLASSIFICATION AND DANGER LEVEL

Regulations have established different classes of Laser danger based on the ability to injure people, from Laser class 1 (basically safe in all conditions) to Laser class 4 dangerous in various conditions.

Lasers which can produce risks, not only for direct or reflected radiation, but also for scattered radiation belong to class 4. These Laser sources can also have a significant risk for the Skin and fire risk for flammable material. For these reasons, the User must put into effect all measures aimed at containing the radiation to make sure that it is terminated at the end of its useful path. The operator must also be informed of the risks from exposure to Laser radiation and must wear specific I.P.D. (individual protection devices) including goggles that protect against radiation and are certified as suitable for this use.

NOTE:
The Filos marker laser device is a **class 4 invisible** source**.**

RADIATION VIEWING CONDITIONS

The Laser output by the Beam Delivery Optic is to be considered as a highly collimated and intense monochromatic light source. Due to these characteristics it can be seen as a “punctiform source” of high luminosity. This means that its image is then focalized on the Retina in a very small spot with a dangerously high power density! If the beam becomes divergent and scatters to a non-reflecting screen, then there is an “extended vision” of the image, with a decisively less dangerous power density. So there are different types of radiation viewing based on the access to the radiation and consequently different degrees of dangerousness.

DIRECT VIEWING OF THE LASER BEAM

This type of viewing is the most dangerous and can occur at the outlet of the laser aperture. It is to be avoided at all costs! No protective goggles represent a valid means against direct viewing of the beam.

DIRECT VIEWING OF THE BEAM AFTER MIRROR REFLECTION

This may occur by directing the beam on a reflecting surface.
Viewing of a mirror reflected beam from a flat surface is very dangerous and equal to direct viewing.

DIRECT VIEWING OF THE BEAM OUTPUT BY AN OPTICAL FIBER

This happens if an Optical Fiber disconnects from the BDO. Viewing of the beam is dangerous up to a significant distance. Filters and Goggles do not ensure safety.

DIRECT VIEWING OF THE BEAM AFTER FOCUSING

This occurs if the Laser beam is not extinguished with an opportune absorber at the end of its useful path. Looking at the beam is dangerous up to a considerable distance. Filters and goggles can ensure safety for brief exposure, as long as they are the right size and certified.

SCATTERED VIEWING OF THE BEAM AFTER FOCUSING

This is the most frequent viewing, but opportune Filters and Goggles can ensure safety, even for prolonged exposure.
The Optical Risk Nominal Distance O.R.N.D. for Filos is showed in the next paragraph.

NOTE:
Always use goggles with conformity certificate.
Remember that **no goggles can provide prolonged protection from direct or mirror-reflected radiation!**

DNRO DETERMINATION AND O.D. OF PROTECTION GOGGLES

In order to determinate the characteristics of the protection goggles, it is essential to determine the characteristics of the radiation, knowing its optical path, the dimensions of the beam and its divergence.

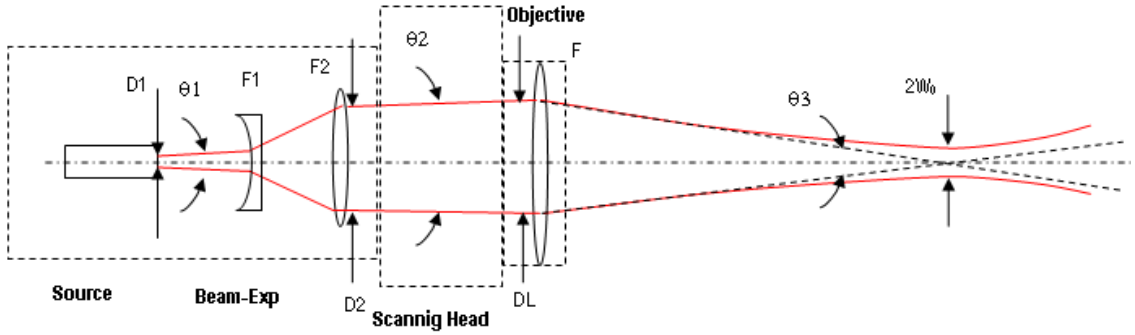

It is very important to know the real divergence of the beam in output from the focalization lens (F-Theta).
With all these optical data it is possible to do the calculate the nominal distance of optical risk (DNRO) and the optical density (DO) requested to the protection filters of the laser radiation.

Calculations have been done following the CEI EN 60825-1 (2007) Normative regarding nominal distance and optical risk in the worst condition and in case of accident exposition of 10s for direct radiation and 100s for diffused radiation.

Wavelength	RIF	1070 nm (± 10 nm) 1120 nm (raman emission)
Laser Type		Q-Switched fiber laser
Observation type		Direct radiation
Pulse energy		1 mJ @ 20 kHz
Pulse duration		100 ns
Beam Diameter	DL	~ 6.0 mm
Beam divergence on the lens	θ_2	0.8 mrad
Exposition time		10 s

EYES AND SKIN RISKS

If exposed to intense Laser radiation, even of a short duration, or a less intense but longer lasting duration, both the Cornea and the Retina can burn and be damaged irreparably forever. This consequence is completely realistic in the event of direct viewing of a class 4 Laser beam.

If subject to direct focalized radiation, even the skin can burn.

In addition, it is necessary to bear in mind that a collateral ultraviolet radiation may exist with the main radiation: long exposure may cause skin cancer.

GENERAL SAFETY REGULATIONS

The User must comply with the regulations and work in the best possible safety conditions to prevent decreasing the degree of machine safety. Therefore it is necessary to develop a Standard Operating Procedure (S.O.P.) related to maneuvers to effect for turning on and off the equipment. This procedure, which shall be prepared around the time of installation, shall serve as a reference for the Operator and shall be written in his/her language.

Training is essential and must include:

- Familiarization with system operating procedures.
- Knowledge of the biological effects of radiation on the Eyes and Skin.
- Understanding of the necessity for Individual Protection Devices (I.P.D.)

COLLATERAL RISK

If the intended use of the source is changed, for example for material processing applications, collateral risks may arise represented by the production of fumes and vapors which may be irritating or toxic, if not removed and adequately filtered before being released into the air again.

NOTE:
It is advisable **not to change the intended use** without previously contacting the Manufacturer.

An additional risk may be represented by fire caused by processing materials other than those the equipment was designed for.

NOTE:
When processing **flammable material**, since there is a **fire danger**, it is indispensable to follow the instructions provided by the manufacturer when the machine is commissioned.

NOTE:
Do not subject **materials other** than those the equipment was designed for to radiation.

The most serious collateral risk associated with laser equipment, which may be fatal, is electricity.
This may occur when the manufacturer's warning and procedures are not followed. Unauthorized and untrained personnel must never do any work on the electrical part. The safety devices must never be removed and their operation must be periodically checked.

NOTE:
Do not work on the electrical part if you are not trained to do so. **Do not remove protection devices**.

NOTE:
When processing **flammable material**, since there is a **fire danger**, it is indispensable to follow the instructions provided by the manufacturer when the machine is commissioned.

For example, during the intended use of the Laser source, if a material being processed undergoes alterations and produces irritating and/or toxic fumes, it may be necessary to remove the fumes from processing before releasing them into the air.

An additional risk may be represented by fire caused by processing materials other than those the equipment was designed for.

NOTE:
Do not subject **materials other** than those the equipment was designed for to radiation.

NOTE:
When processing **flammable material**, such as plastic, since there is a **fire danger**, it is indispensable to follow the instructions provided by the manufacturer when the machine is commissioned and follow the instructions in the **SAFETY** Chapter, in the **Collateral Risks** section.

APPENDIX D

APPENDIX F: MECHANICAL DRAWS

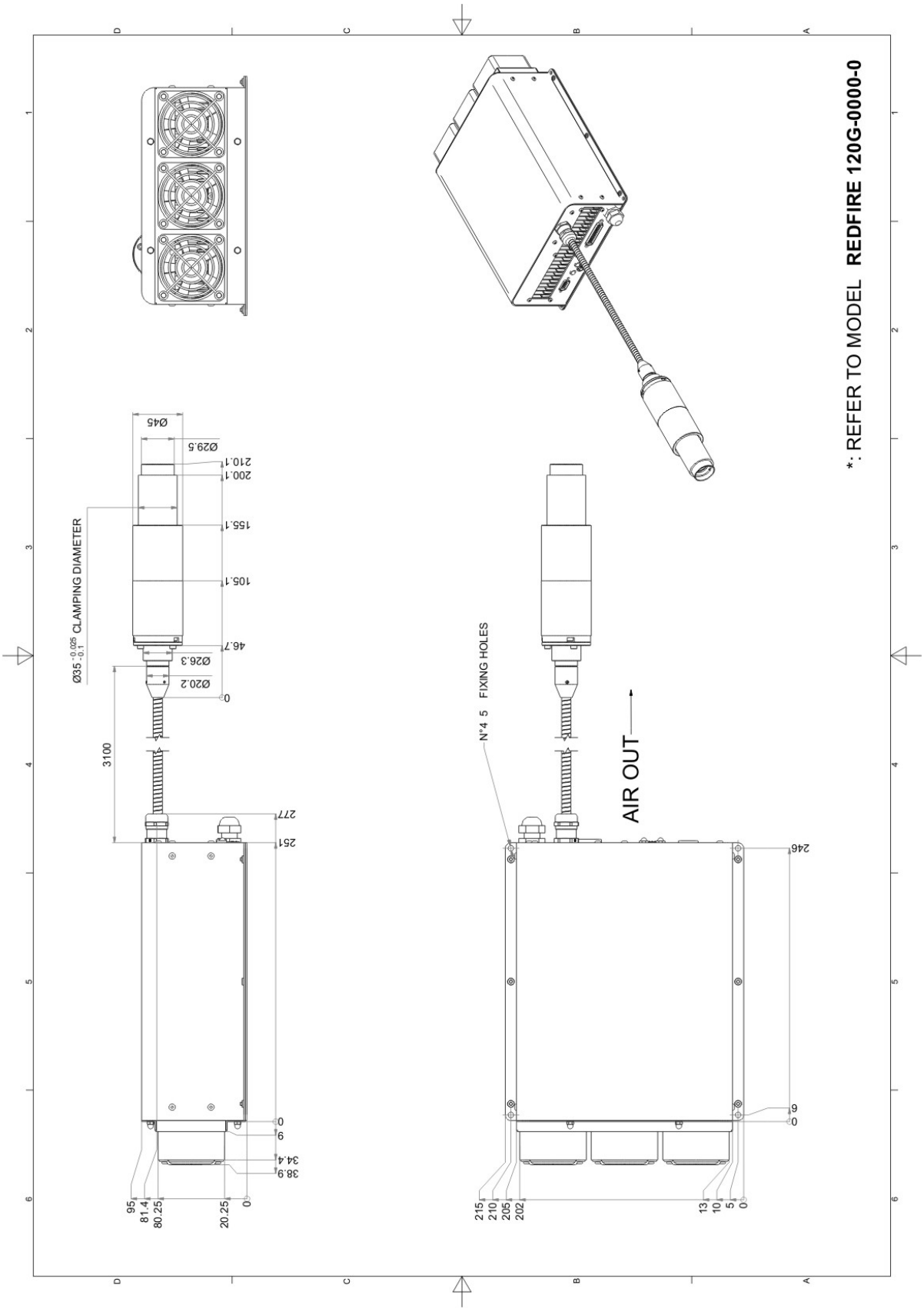

APPENDIX F

FIGURES

Figure 1: Filos Laser Source. vi
Figure 2: Example of a seal. 12
Figure 3: Control Rack. Figure 4: BDO 13
Figure 5: Interlock. Figure 6: USB pen drive. Figure 7: Quick guides. 13
Figure 8: Control rack overview. 15
Figure 9: Filos transport. 16
Figure 10: Fixing laser source 17
Figure 11: Correct air flow. 18
Figure 12: Wiring of power supply cables 19
Figure 13: Wiring earth cable. 19
Figure 14: Wiring interlock connector. 20
Figure 15: Wiring RS232 connector. 20
Figure 16: Wiring Laser Control connector. 21
Figure 17: Recommended laser connection diagram 22
Figure 18: Male panel plug cod. TB4M (front view) 26
Figure 19: Female cable mount connector cod. TY4F (solder view) 26
Figure 20: Female panel socket SUB-D 25 (frontal view). 27
Figure 21: External connection example. 32
Figure 22: Cleaning laser output. 33
Figure 23: External labels laser source location. 35
Figure 24: External labels BDO location 36
Figure 25: Eyeball section. 42

NOTE

DATALOGIC AUTOMATION

Headquarters
Via Lavino, 265
40050 Monte San Pietro
Bologna - Italy
Tel. +39 051 6765611
Fax +39 051 6759324
Purchasing Dept. Fax +39 051 6765499
info.automation.it@datalogic.com

Laser Marking operation officies

Donnas
Reg. Gurey, via Le Gorrey, 10
11020 Donnas (AO) - ITALY
Tel. +39 0125 8128201
Fax +39 0125 8128401

Sesto Calende
Via dell'Industria, 20
21018 Sesto Calende (VA) - ITALY
Tel. +39 0331 9180601
Fax +39 0331 9180801